PRODUCT SHEET

Snap Frame Standard A4 Mitred Corners 25 mm Wood

KRA4G25LB

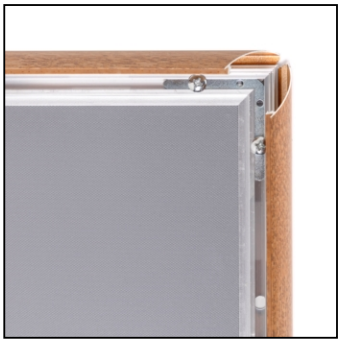

- **Cost effective, elegant display solution for A4 posters**
- **Quick poster replacement**
- **Over 20 variations available**

PRODUCT SHEET

Snap Frame Standard A4 Mitred Corners 25 mm Wood

KRA4G25LB

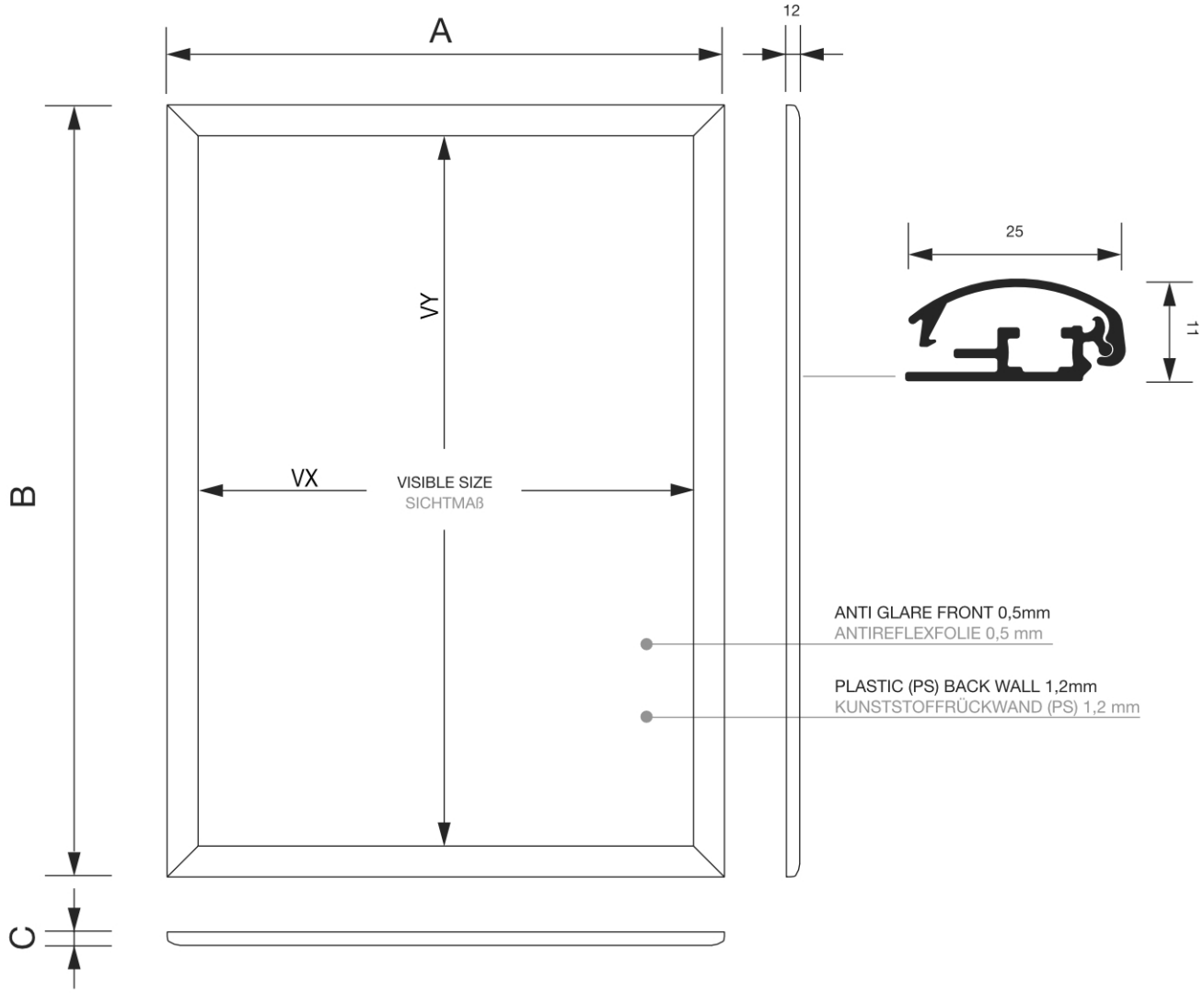

BACK VIEW
RÜCKANSICHT

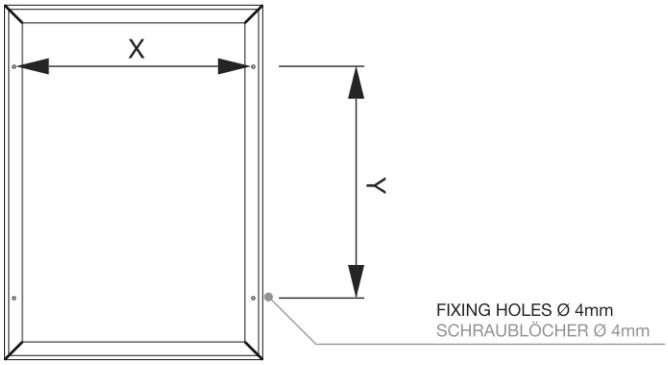

ACCESSORIES
ZUBEHÖR

(SOSSET)
SET OF SCREWS
SCHRAUBENSET

(KRHOOK)
HANGING HOOKS
HAKEN ZUM ABHÄNGEN

(HSKR)
HANGING SET
HÄNGESET

PRODUCT SHEET

Snap Frame Standard A4 Mitred Corners 25 mm Wood

KRA4G25LB

GENERAL INFO

SKU	Sizes (mm) (A x B x C)	Format (mm)	Visible size (mm) (VXxVY)	Hole spacing (mm) (XxY)
KRA4G25LB	241 x 328 x 11	A4 (210 x 297 mm)	191 x 278 mm	221 x 119 mm

Orientation	Weight (kg)
Vertical	0,45

PACKAGING INFORMATION

Packaging unit 1 (mm)	Packaging unit 2 (mm)	Packaging unit 3 (mm)
337 x 250 x 20	-	-

Palette number of pieces	Palette weight (kg)	Palette type
800	496	EUR

ADDITIONAL INFORMATION

Product certifications	EAN
No	8596052191473

SIZE GUIDE

Snap Frame Standard A4 Mitred Corners 25 mm Wood
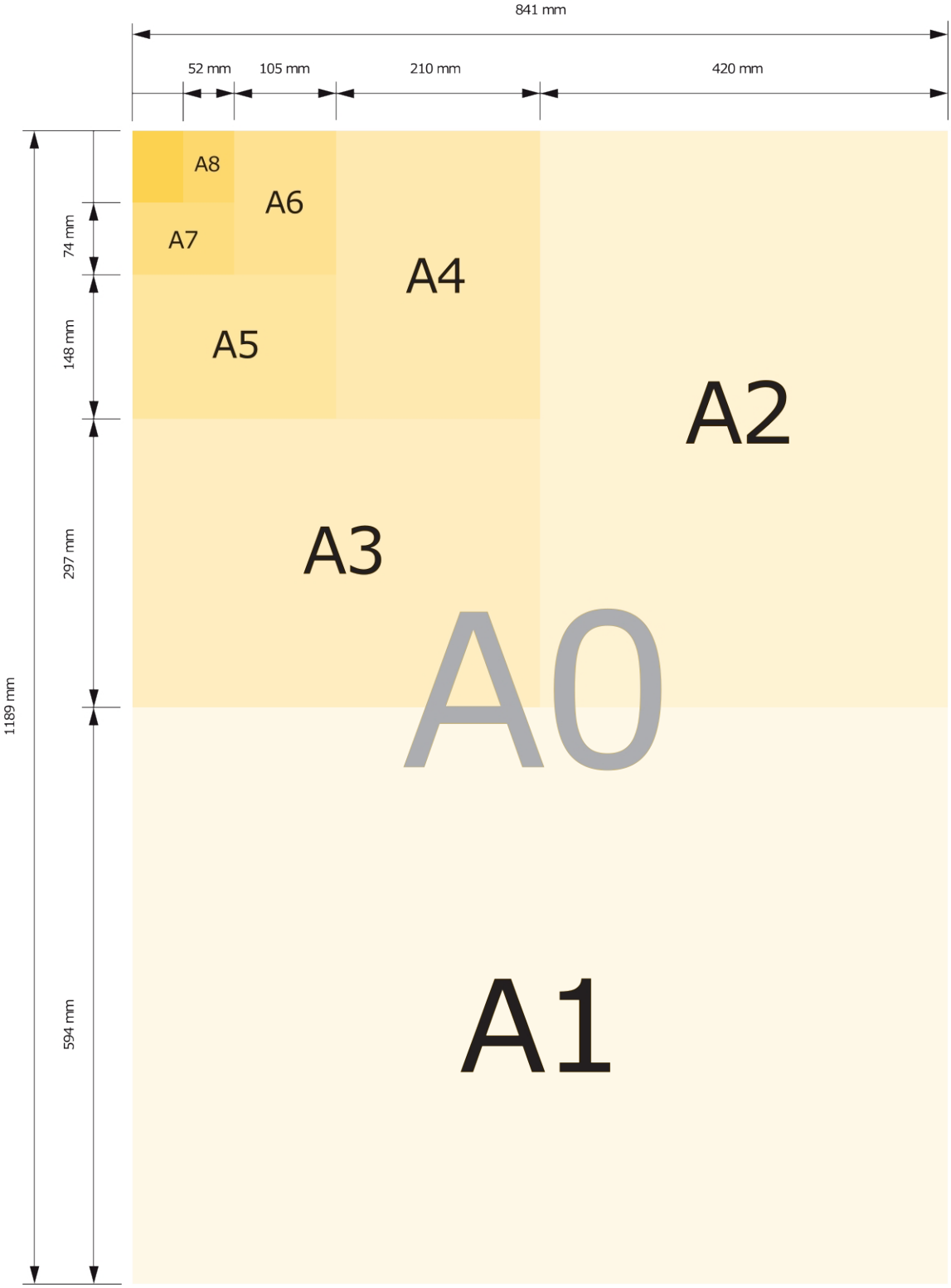
KRA4G25LB